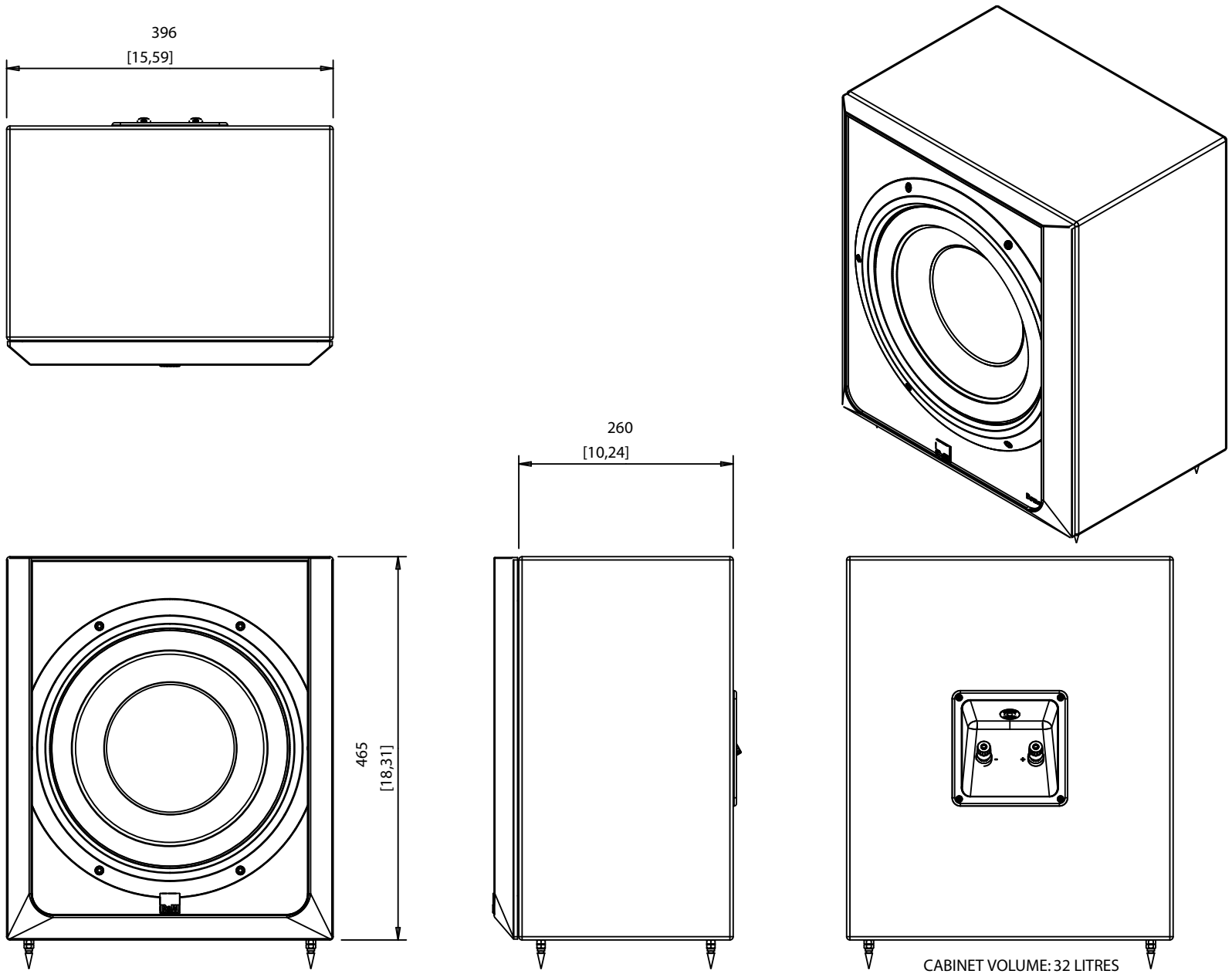

CABINET VOLUME: 32 LITRES

ISSUE HISTORY

ISS	ECR/SAN NUMBER	REQ
3		PA
DRN	DATE	CKD
RM	27.6.07	

ISSUE DETAILS:

GENERIC DRIVER REPLACES
ASW750 DRIVER.
CT600 TERMINAL TRAY ADDED.
SPIKES AND FEET INCLUDED
IN 3-D DATA.
PART NUMBER CHANGED.

ISS	ECR/SAN NUMBER	REQ
4		TM
DRN	DATE	CKD
RM	24.7.07	

ISSUE DETAILS:

TRIM RING & GRILLE OUTLINE
ADDED;
JUST SPIKES SHOWN;
PRODUCT NAME UPDATED

IF IN DOUBT ASK

ALL COMPONENTS MUST BE RoHS COMPLIANT

MATERIAL	FINISH	TITLE	FIRST DRAWN BY	COPYRIGHT C	DOC PART NO.	PART NO.
-	-	CT6 SW12 GENERAL ASSY	RM	2007 B&W GROUP LTD		CP00415
			DATE 23.4.07	SCALE NTS	DRG SIZE A3	3-D DATA FILE NO A8592 -ISS- 4
						2-D DRG. NO. SHEET OF A8592-1-1 −ISS − 4

B&W
Bowers & Wilkins